

THE POWER OF PARTNERSHIP

C-130 CAPABILITIES

Collins Aerospace	**Collins Aerospace**'s primary landing-gear products include Duracarb Carbon Brake and Lock-Ring Wheel retrofit. IPT also stocks wheels, brakes, and components for your AOG needs.
Extant Aerospace	**Extant Aerospace** offers the Combined Altitude Radar Altimeter (CARA) System, AN/APN-232 Reciever Transmitter (RT) Height Indicator (HI) Signal Data Converter (SDC).
Northrop Grumman	**Northrop Grumman** offers the APN-241 Tactical Transport Radar Spares and Repairs.
Woodward	**Woodward** is a manufacturer of Speed Switch, Actuating Assy, Shaft Assy, Globe Valve for C-130 H and legacy. Rudder/ Aileron & Elevator Autopilot Servo, Prop Pitch Angle Transducer and Azimuth Drive for C-130 J.
Turbopower	**Turbopower**, LLC is a Rolls Royce (RR) Authorized Maintenance Center (AMC) providing value-added repair and overhaul services to a worldwide fleet of military aircraft.
PacSci EMC	**PacSci EMC** products ensure the proper initiation, sequencing, and function of aircraft safety systems such as Cartridge and Fire Extinguisher.
Aero Fluid Products	**Aero Fluid Products** offers a variety of valves including hydraulic, engine, pneumatic, bleed air, anti-ice, pressure regulating, and fuel along with cabin pressure controls and electromechanical and linear actuators.
Adams Rite Aerospace	**Adams Rite Aerospace** has over 80 years experience offering Control Wheel, Pilot Control Wheel Assy, Column Assy-Control, Flight Station (Pilot & Co-Pilot).
Triumph	**Triumph** specializes in the design, development, certification, manufacture and repair of fuel pumps, fuel metering units, fuel controls, and electronic engine control systems.
PCI Gases	**PCI Gases** delivers advanced oxygen and nitrogen solutions for military applications worldwide.
Chemring Energetic Devices	**Chemring Enerergetic Devices** is the leading manufacturer of countermeasures and energetics as well as life support test equipment for air force and naval applications.
EnerSys	**Enersys** is a prominent enterprise engaged in the manufacturing and distribution of reserve power and motive power batteries, power equipment, and battery accessories.
Whippany Actuation Systems	**Whippany Actuation Systems** serves the aerospace and defense industries by designing, manufacturing, and servicing custom electromechanical actuation solutions for commercial and military applications.
BAE Systems	**BAE Systems** is a leading provider of ALE-47 Airborne Countermeasures Dispenser System, Testers, Memory Load Verifier, Threat Matrix Generator, C-130 Loadmaster Seat, Aircraft Armor Systems, Wall Style Aircraft Troop Seat and AN/ARC-164 Radio.
Columbus Jack	**ColumbusJACK/Regent** supplies high-quality hydraulic jacks and lifting systems ensuring safe and efficient lifting, positioning, and maintenance of heavy equipment and structures.
Aces Systems	**Aces Systems** constructs VIPER-2E is a versatile yet compact instrument that combines all of the diverse technologies required for high-end engine vibration analysis, transient balance, fan trim balance, propeller balance and acoustic analysis into one tool.
Rockmart Fuel Containment	**Rockmart Fuel Containment** is the global leader in flexible MIL-SPEC aviation fuel tanks engineered for ballistic-tolerance and crashworthiness.

CARLOS DIAZ
BD MANAGER
CANADA & LATAM
carlos@iptsb.com

NGEE SING LOH
BD DIRECTOR
ASIA/PAC
nsloh@iptsb.com

MARC VAN SPRANG
BD MANAGER
EMEA
marc@iptsb.com

AYOUP JARRAI
BD MANAGER
EMEA
ayoup@iptsb.com

HAIDER LONE
SR. BD MANAGER
EMEA
haider.lone@iptsb.com

INTEGRATED PROCUREMENT TECHNOLOGIES
7230 HOLLISTER AVENUE
GOLETA, CA 93117 USA
P. 805 682 0842 F. 805 682 9434



THE POWER OF PARTNERSHIP

C-130 WHEEL & BRAKE UPGRADE

Collins Aerospace



LOCK RING WHEEL (BOLTLESS)

P/N 3-1660
NSN 1630-01-561-4960
Lock Ring Design
Service Proven on F-16 and C-5
25,000 Mile Wheel Life



DURACARB® CARBON BRAKE

P/N 2-1744
NSN 1630-01-561-4963
Optimized 3-Rotor, 6 Piston Design
2,000 Landings per Overhaul





FEATURE	BENEFIT
Faster Tire Change Time	80% reduced tire change time (52 vs. 255 min. for current wheel); Decreased maintenance time
Longer Wheel Life	6 times longer life (25,000 vs. 4,220 mile life for current wheel) Fewer wheel replacements; Increased operational usage
More Landings Per Overhaul	8 times longer life (2,000 vs. 250 LPO for current steel heatsink) Fewer brake replacements; Increased operational usage
Lighter Weight	17% lighter weight (270 vs 327lbs. for current wheel and brake) Increased payload; Reduced fuel cost
Lower Component Count	17% fewer parts (490 vs 587 for current wheel and brake) Reduced maintenance and logistics

One aircraft upgrade kit is required to support the installation of 4 Lock Ring Wheels and 4 Carbon brakes per aircraft (8-12 hours to complete wheel and brake upgrade).

P/N 380-180 Aircraft Upgrade Kit		
Part Number	**Component Description**	**Qty in Kit**
380-179	PARTS KIT-BRACKET	1
380-174	PARTS KIT - FLEXIBLE HOSE	1
380-175	PARTS KIT - HUB CAP	4
63-537	NUT	48
80-836	WASHER, PLAIN	48
43-1524	BOLT	48
M83485/1-908	O-RING,RUBBER	4
M83485/1-110	PACKING - PREFORMED	4
M83485/1-906	PACKING - PREFORMED	4
M83485/1-904	PACKING - PREFORMED	2

CARLOS DIAZ
BD MANAGER
CANADA & LATAM
carlos@iptsb.com

NGEE SING LOH
BD DIRECTOR
ASIA/PAC
nsloh@iptsb.com

MARC VAN SPRANG
BD MANAGER
EMEA
marc@iptsb.com

AYOUP JARRAI
BD MANAGER
EMEA
ayoup@iptsb.com

HAIDER LONE
SR. BD MANAGER
EMEA
haider.lone@iptsb.com

INTEGRATED PROCUREMENT TECHNOLOGIES
7230 HOLLISTER AVENUE
GOLETA, CA 93117 USA
P. 805 682 0842 F. 805 682 9434

RETROFIT CONSIDERATIONS

Collins Aerospace

Hydraulic pressure available at the brakes (2,030 / 3,000 PSI) Brake control model and capability (Mk II / Mk IV)

C-130 MODEL	CARBON BRAKE	LOCK RING WHEEL	INSTALL KIT	3,000 PSI BRAKE METERING VALVE	Mk IV ANTI-SKID SYSTEM
J	4	4	1		
Legacy (pre-J)	4	4	1	2 *	2 **

* Some aircraft already have 3,000 PSI BMVs installed - 1985 (85-0003) and newer
** Recommended for best performance – required above 155,000 pounds

Stay with MK II Anti-Skid System

ITEM	P/N	NSN	QTY/AC	SUPPLIER
Carbon Brake	2-1744	1630-01-561-4963	4	COLLINS
Lock Ring Wheel	3-1660	1630-01-561-4960	4	COLLINS
Install Kit (Hoses, brackets, fasteners, etc.)	380-180	1630-01-622-0033	1	COLLINS
3,000 PSI Brake Metering Valve	23410-3	1630-00-998-7897	***	EATON
Mk II Anti-Skid System				
3,000 PSI MK II Controller	42-109A	1630-01-104-1015	***	CRANE

*** Some aircraft already have 3,000 PSI BMVs and Controllers installed

TIME COMPLIANT TECHNICAL ORDERS (TCTOS)

Final Release October 2012

TO 1C-130-2095

Replacement of Mk II anti-skid system with Mk IV anti-skid system on C-130E/H aircraft

TO 1C-130-2096

Replacement of 2030 PSI brake metering valves (PN 23410 or 11060-7) with 3000 PSI brake metering valves (PN 23410-3 or 697395-1) on C-130E/H aircraft

TO 1C-130-2098

Installation of carbon brakes (PN 2-1744) and replacement wheels (PN 3-1660) on select C-130H aircraft

TECHNICAL ORDERS (TOS)

BRAKE

Intermediate– 4B1-2-1342
Depot – 4B1-2-1323
Illustrated parts breakdown (IPB) – 4B1-2-1334

WHEEL

Intermediate – 4W1-3-1662
Depot – 4W1-3-1663
IPB – 4W1-3-1664

CARLOS DIAZ
BD MANAGER
CANADA & LATAM
carlos@iptsb.com

NGEE SING LOH
BD DIRECTOR
ASIA/PAC
nsloh@iptsb.com

MARC VAN SPRANG
BD MANAGER
EMEA
marc@iptsb.com

AYOUP JARRAI
BD MANAGER
EMEA
ayoup@iptsb.com

HAIDER LONE
SR. BD MANAGER
EMEA
haider.lone@iptsb.com

INTEGRATED PROCUREMENT TECHNOLOGIES
7230 HOLLISTER AVENUE
GOLETA, CA 93117 USA
P. 805 682 0842 F. 805 682 9434



C-130 LIGHTING SYSTEMS

Collins Aerospace

PART NUMBER	DESCRIPTION	NSN
9HD409687-00	COVER,VEHICULAR LIGHT	6220-01-667-4779
2LA007585-50	LIGHT,DOME	6220 15094754
2LA 003 849 01	LIGHT,NAVIGATIONAL,AIRCRAFT	6220 13589974
2LA 003 849-00	LIGHT,NAVIGATIONAL,AIRCRAFT	6220 13589974
8ES 400 634-00	SEMICONDUCTOR DEVICE, THYRISTOR	5961 13610527
8ES 400 637-00	TRANSISTOR	5961 13610518
9ML707168-34	TRANSISTOR	5961 13610518
GEPSP150-5	CAPACITOR,FIXED,METALLIZED, PAPER-PLASTIC DIELECTRIC	5910 11242436
9MJ401817-00	INSULATOR,PLATE	5970 13615067
2LA 007 585-30	LIGHT,DOME	6220 14395600
9EL409543-00	LENS,LIGHT	6210 15052789
9EL409543-05	LENS,LIGHT	6210 15052789
2LA007586-30	LIGHT,DOME	6220 14392772
8ES 400 633-00	SEMICONDUCTOR DEVICE,DIODE	5961 13610520
2LA 007 585-40	LIGHT,DOME	6220 14395608
8ES 401 269-00	TRANSISTOR	5961 13616402
2LA007585-50	LIGHT,DOME	6220 15094754
9ML 401 829-01	RELAY ASSEMBLY	5945 13600922
8ES 401 422-00	SEMICONDUCTOR DEVICE,DIODE	5961 13610525
8ES 401 425-01	TRANSISTOR	5961 13610519
8ES 400 320-00	TRANSISTOR	5961 13610517
2LA 007 519-30	LIGHT,DOME	6220 14393004
9HD409687-00	COVER,VEHICULAR LIGHT	6220 16674779
2LA 003 849-00	LIGHT,NAVIGATIONAL,AIRCRAFT	6220 12914266
2LA003849-00	LIGHT,NAVIGATIONAL,AIRCRAFT	6220 13589974
2LA 003 849 01	LIGHT,NAVIGATIONAL,AIRCRAFT	6220 13589974
8ES 005 164-01 P00	CONTROL,NAVIGATIONAL LIGHT	6220 13249002
8ES 005 164-02 M00	CONTROL,NAVIGATIONAL LIGHT	6220 13249002
8ES 005 164-02	CONTROL,NAVIGATIONAL LIGHT	6220 13249002
8ES003417-01	POWER SUPPLY	6130 12907512
6220-12-187-9698	POWER SUPPLY	6130 12907512
8 ES 003 417-00 M01	POWER SUPPLY	6130 12907512
8ES-003-417-00	POWER SUPPLY	6130 12907512
8ES 400 634-00	SEMICONDUCTOR DEVICE,THYRISTOR	5961 13610527
9XB 402 093-00	INSULATOR,BUSHING	5970 13615071
9ML 401 553-00	CAPACITOR,FIXED,ELECTROLYTIC	5910 13652401
9ML 401 847-00	REACTOR	5950 13605008
8ES 400 637-00	TRANSISTOR	5961 13610518
9GX 852 298-00	GASKET	5330 13599352
9MJ 401 817-00	INSULATOR,PLATE	5970 13615067

PART NUMBER	DESCRIPTION	NSN
402068-00	CONTACT,ELECTRICAL	5999 10363669
9NB402068-00	CONTACT,ELECTRICAL	5999 10363669
9HD 401 863-00	COVER,ACCESS	5340 13598824
9MJ 401 471-00	INSULATOR,BUSHING	5970 13615072
9NM 402 067-00	SOCKET,PLUG-IN ELECTRONIC COMPONENTS	5935 13605991
9MK 401 831-00	TRANSFORMER,POWER	5950 13605029
2LA 007 585-30	LIGHT,DOME	6220 14395600
A 007 585-30	LIGHT,DOME	6220 14395600
9ML 401 878-01	RESISTOR,FIXED,FILM	5905 13603945
9NS 401 720-02	SCREW,MACHINE	5305 13660422
9XB 046 627-00	INSULATOR,DISK	5970 13615066
9MJ 401 810-00	INSULATOR,PLATE	5970 13615068
8HG 401 121-00	CLAMP,LOOP	5340 13599386
2LA 007 586-30	LIGHT,DOME	6220 14392772
9MJ 400 641-00	INSULATOR,PLATE	5970 13615069
8ES 400 633-00	SEMICONDUCTOR DEVICE,DIODE	5961 13610520
A 007 585-40	LIGHT,DOME	6220 14395608
2LA 007 585-40	LIGHT,DOME	6220 14395608
402260-00	SWITCH,ROTARY	5930 123240012
8ES 401 269-00	TRANSISTOR	5961 13616402
9ML 401 829-01	RELAY ASSEMBLY	5945 13600922
9ML 401 829-00	RELAY ASSEMBLY	5945 13600922
8ES 401 422-00	SEMICONDUCTOR DEVICE,DIODE	5961 13610525
9ML 401 878-02	RESISTOR,FIXED,FILM	5905 13601439
9ML 401 865-00	CAPACITOR,FIXED,CERAMIC DIELECTRIC	5910 13645178
8JB 402 315-00	CONNECTOR,RECEPTACLE,ELECTRICAL	5935 13602899
9ML 401 415-05	RESISTOR,FIXED,COMPOSITION	5905 13603024
8ES 401 425-01	TRANSISTOR	5961 13610519
9ML 401 492-00	CAPACITOR,FIXED,ELECTROLYTIC	5910 13652400
8ES 400 320-00	TRANSISTOR	5961 13610517
9NM 401 389-02	NUT,PLAIN,PLATE	5310 13607509
8GH 007 429-28	LAMP,INCANDESCENT	6240 123448188
007429-28	LAMP,INCANDESCENT	6240 123448188
4RD 401 842-00	RELAY,ELECTROMAGNETIC	5945 13598834
9HD 402 153-00	PLATE,MOUNTING	5340 13607583
2LA 007 519-30	LIGHT,DOME	6220 14393004
2LA 003 849-00 M00	LIGHT,NAVIGATIONAL,AIRCRAFT	6220 12914266
6220-12-187-5292	LIGHT,NAVIGATIONAL,AIRCRAFT	6220 12914266
2LA003849-00	LIGHT,NAVIGATIONAL,AIRCRAFT	6220 12914266
2LA 003 849 00 M00	LIGHT,NAVIGATIONAL,AIRCRAFT	6220 12914266

CARLOS DIAZ
BD MANAGER
CANADA & LATAM
carlos@iptsb.com

NGEE SING LOH
BD DIRECTOR
ASIA/PAC
nsloh@iptsb.com

MARC VAN SPRANG
BD MANAGER
EMEA
marc@iptsb.com

AYOUP JARRAI
BD MANAGER
EMEA
ayoup@iptsb.com

HAIDER LONE
SR. BD MANAGER
EMEA
haider.lone@iptsb.com

INTEGRATED PROCUREMENT TECHNOLOGIES
7230 HOLLISTER AVENUE
GOLETA, CA 93117 USA
P. 805 682 0842 F. 805 682 9434



THE POWER OF PARTNERSHIP

C-130 CAPABILITIES

Extant® AEROSPACE

COMBINED ALTITUDE RADAR ALTIMETER (CARA) AN/APN-232

P/N 8010000653-6
NSN 5841-01-301-4588

- Standard radar altimeter on many USAF platforms
- Fully military-qualified system for severe operational environments
- Low Probability of Detection and Intercept
- High reliability
- Existing organization and intermediate level test and maintenance capabilities
- Fully established and committed depot logistics support
- Fully integrated with critical avionics systems
- Automatic Terrain Avoidance/Following (TA/TF) Systems
- Ground Collision/Proximity Avoidance/Warning Systems
- Terminal Collision Avoidance System (TCAS)

RECEIVER TRANSMITTER (RT)



HEIGHT INDICATOR (HI)



SIGNAL DATA CONVERTER (SDC)

WEIGHT	Receiver Transmitter (RT): 9.2 pounds
	Signal Data Converter (SDC): 1.9 pounds
	Indicator: 2.1 pounds
	Antenna: 0.3 pound each
DIMENSIONS	RT: 3.50 x 6.30 x 8.75 inches
	SDC: 9.48 x 6.30 x 0.82 inches
	Indicator: 3.25 x 3.25 x 4.10 inches
	Antenna: 4.0 x 4.0 x 0.21 inches

CARLOS DIAZ
BD MANAGER
CANADA & LATAM
carlos@iptsb.com

NGEE SING LOH
BD DIRECTOR
ASIA/PAC
nsloh@iptsb.com

MARC VAN SPRANG
BD MANAGER
EMEA
marc@iptsb.com

AYOUP JARRAI
BD MANAGER
EMEA
ayoup@iptsb.com

HAIDER LONE
SR. BD MANAGER
EMEA
haider.lone@iptsb.com

INTEGRATED PROCUREMENT TECHNOLOGIES
7230 HOLLISTER AVENUE
GOLETA, CA 93117 USA
P. 805 682 0842 F. 805 682 9434

ELECTROMECHANICAL INDICATORS

Extant Aerospace has a large variety of electromechanical indicators which provide attitude indication across a broad spectrum of applications:

- The Horizontal Situation Indicator (HSI) provides pilot with heading, course, single or dual pointers, remote or manual heading and course pointers, DME readouts, and glideslope.
- The Bearing Distance Heading Indicator (BDHI) displays distances up to 1999 nautical miles (NM) with a bearing pointer which provides information to select station.
- The Attitude Director Indicator (ADI) 2 or 3 axis display of pitch, roll or pitch, roll, and azimuth. Additional features such as rate of turn, glideslope and localizer can also be added.





Production & Repair Support

PART NUMBER	PRODUCTION	REPAIR
10673	Yes	On Request
10481	Yes	On Request
10578-002	Yes	On Request
136493	Yes	On Request
114098	Yes	On Request
113540	Yes	On Request
100524	On Request	Yes
102550	On Request	Yes
111302-5	On Request	Yes
111303-4	On Request	Yes
112750	On Request	Yes
125200	On Request	Yes
126460	On Request	Yes
128710	On Request	Yes
129060-21	On Request	Yes
132130	On Request	Yes
132750-5	On Request	Yes
135070-5	On Request	Yes
136670-3	On Request	Yes
137980-1	On Request	Yes
147140-9	On Request	Yes
165840-9	On Request	Yes

CARLOS DIAZ
BD MANAGER
CANADA & LATAM
carlos@iptsb.com

NGEE SING LOH
BD DIRECTOR
ASIA/PAC
nsloh@iptsb.com

MARC VAN SPRANG
BD MANAGER
EMEA
marc@iptsb.com

AYOUP JARRAI
BD MANAGER
EMEA
ayoup@iptsb.com

HAIDER LONE
SR. BD MANAGER
EMEA
haider.lone@iptsb.com

INTEGRATED PROCUREMENT TECHNOLOGIES
7230 HOLLISTER AVENUE
GOLETA, CA 93117 USA
P. 805 682 0842 F. 805 682 9434

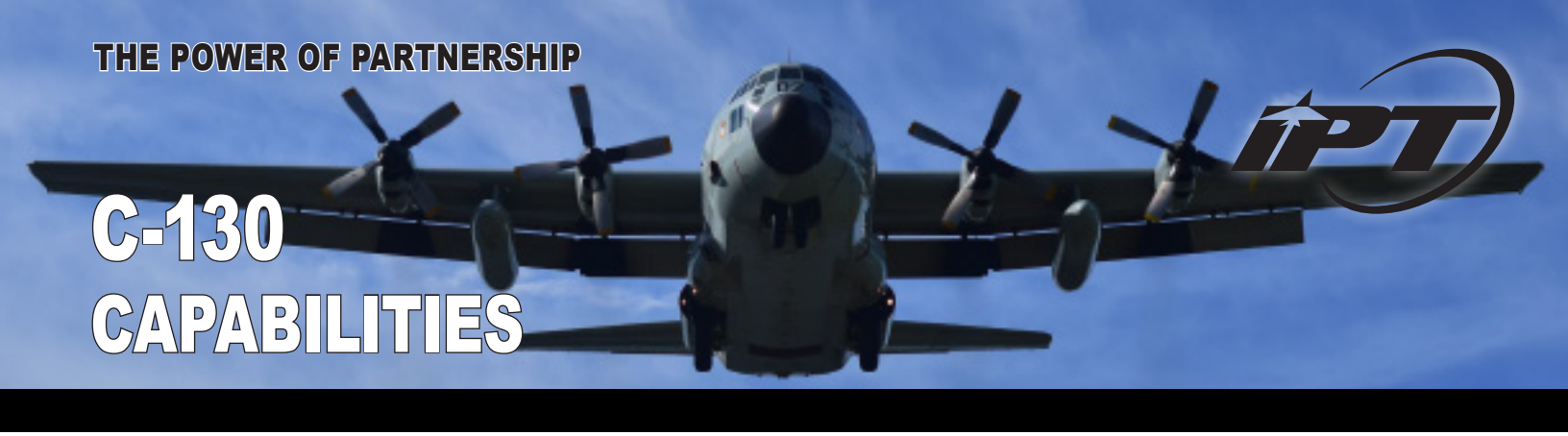

NORTHROP GRUMMAN APN-241

TACTICAL TRANSPORT RADAR

Northrop Grumman's AN/APN-241 radar delivers game changing mission capability to the transport community worldwide, supporting both military and humanitarian missions.

IPT represents all repairs and FN spares sales of the APN-241 Radar, Northrop is the sole source for repairs, there are no other authorized repair centers.

DESCRIPTION	C-130H	C-130J
RECEIVER TRANSMITTER PROCESSOR	780R290G06 780R290G07 780R290G08 780R290G09	780R270G10 780R270G13
RECEIVER TRANSMITTER PROCESSOR MOUNT	780R164G03	780R164G03
ANTENNA	788R330G01	788R330G01
RADAR TARGET INDICATOR (NAV DISPLAY)	780R401G01	N/A
DATA ENTRY JOYSTICK (CURSOR CONTROL)	780R406G01	N/A
RADAR SET CONTROL (PILOT CTRL PANEL)	780R404G01	N/A
RADAR SET CONTROL (NAV CTRL PANEL)	780R405G03	N/A
RADAR SET CONTROL (PILOT DISPLAY CTRL PANEL)	780R402G03	N/A







CARLOS DIAZ
BD MANAGER
CANADA & LATAM
carlos@iptsb.com

NGEE SING LOH
BD DIRECTOR
ASIA/PAC
nsloh@iptsb.com

MARC VAN SPRANG
BD MANAGER
EMEA
marc@iptsb.com

AYOUP JARRAI
BD MANAGER
EMEA
ayoup@iptsb.com

HAIDER LONE
SR. BD MANAGER
EMEA
haider.lone@iptsb.com

INTEGRATED PROCUREMENT TECHNOLOGIES
7230 HOLLISTER AVENUE
GOLETA, CA 93117 USA
P. 805 682 0842 F. 805 682 9434



THE POWER OF PARTNERSHIP

C-130 CAPABILITIES

WOODWARD

CAGE CODE	P/N	DESCRIPTION	NSN
66503	9901-300	SPEED SWITCH	2915-00-464-6946
66503	9901-301	SPEED SWITCH	2915-00-464-6938
66503	9901-507	ACTUATING ASSEMBLY	2915-00-588-8904
66503	9901-502	SHAFT ASSEMBLY	2915-00-715-8327
81873	1085350-7	SERVO VALVE	1650-00-055-6906
81873	26800	GLOBE VALVE	4820-00-529-4689
19710	3350370-3	RUDDER AUTOPILOT SERVO (C-130J)	6615-01-435-1133
19710	3350371-3	AILERON AUTOPILOT SERVO (C-130J)	6615-01-435-1138
19710	3350372-3	ELEVATOR AUTOPILOT SERVO (C-130J)	5990-01-434-7503
19710	3A1273A	PROPELLER PITCH ANGLE TRANSDUCER (C-130J)	6695-01-475-6213
19710	PJH201B	AZIMUTH DRIVE (C130J)	3010-01-445-6130
19710	PJH202A	AZIMUTH DRIVE (C-130J)	6105-01-445-9794
19710	PJH203	AZIMUTH DRIVE (C-130J)	N/A
	26456	POPPET-VALVE SOLENOID	N/A
	41000660	VALVE ASSEMBLY, SWITCHING	N/A
	1056350-7	SERVOVALVE	N/A
	22287770-101	SERVOVALVE	N/A
	299204A	AZIMUTH BULL GEAR	N/A
	299205A	ELEVATION BULL GEAR	N/A
	299205B	ELEVATION BULL GEAR	N/A
	3350371-5	SERVO INSTL - AILERON AUTOPILOT	N/A
	40001-09	ASSY C130J DITU DE-ICER TIMER UNIT (40000-09)	N/A
	40185-07	ASSY C130J DITU DE-ICER TIMER UNIT POWER MODULE (40140-07)	N/A
	40186-11	ASSY C130J DITU DE-ICER TIMER UNIT CONTROL MODULE (40186-11)	N/A
	40187-05	ASSY C130J DITU DE-ICER TIMER UNIT CHASSIS (40100-05)	N/A
	8503422-901	SERVO DRUM AND BRACKET	N/A
	PJH203A/021T	AZIMUTH DRIVE	N/A

FACTORY NEW PARTS

- IPT provides OEM-certified parts factory new from Woodward
- Every part comes with OEM Certificate of Conformance (COC)
- IPT provides guaranteed OEM pricing

REPAIR PROGRAM

- IPT is responsible for quoting repair and managing all required logistics, including export license
- Woodward performs all repairs using most recent engineering updates and proprietary technology
- Repair is covered by standard 12 month warranty
- MTBF is increased providing operator w/ increased aircraft availability

CARLOS DIAZ
BD MANAGER
CANADA & LATAM
carlos@iptsb.com

NGEE SING LOH
BD DIRECTOR
ASIA/PAC
nsloh@iptsb.com

MARC VAN SPRANG
BD MANAGER
EMEA
marc@iptsb.com

AYOUP JARRAI
BD MANAGER
EMEA
ayoup@iptsb.com

HAIDER LONE
SR. BD MANAGER
EMEA
haider.lone@iptsb.com

INTEGRATED PROCUREMENT TECHNOLOGIES
7230 HOLLISTER AVENUE
GOLETA, CA 93117 USA
P. 805 682 0842 F. 805 682 9434



THE POWER OF PARTNERSHIP

C-130
REPAIR AND OVERHAUL CAPABILITIES

turbopower™

T-56 ENGINE

Turbopower, LLC is a Rolls Royce (RR) Authorized Maintenance Center (AMC) providing value-added repair and overhaul services to a worldwide fleet of military, commercial, and corporate-owned aircraft.

- RR Authorized Maintenance Center
- FAA Certified Repair Station for engine components, QEC's, APU and accessories
- Extensive components repair catalogue
- QEC Repair facility with independent sheet metal, electrical and paint capabilities
- SO9001: 2015/ EASA Certified
- T56/501D: RR AMC, engine and module repair and overhaul, testing, component repair, and technical services
- QEC: C-130/P-3/L-100 QEC Repair Center, 40,000 sq. ft. facility for QEC repairs and Non Destructive Testing (NDT)

	P/N
Series I	T-56-A-9C, D
	T56-A-11B
Series II	T56-A-7A, B
	T56-A-10WA
Series III	T56-A-14, LFE
	T56-A-15, LFE
	T56-A-16
	T56-A-423, 425

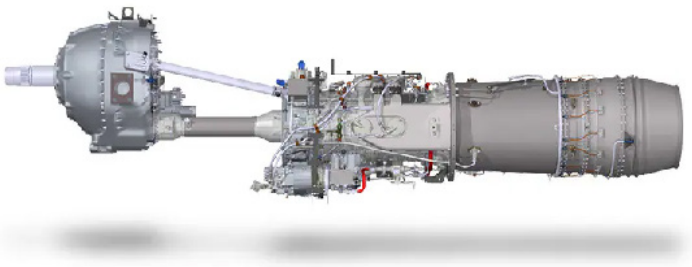

CARLOS DIAZ
BD MANAGER
CANADA & LATAM
carlos@iptsb.com

NGEE SING LOH
BD DIRECTOR
ASIA/PAC
nsloh@iptsb.com

MARC VAN SPRANG
BD MANAGER
EMEA
marc@iptsb.com

AYOUP JARRAI
BD MANAGER
EMEA
ayoup@iptsb.com

HAIDER LONE
SR. BD MANAGER
EMEA
haider.lone@iptsb.com

INTEGRATED PROCUREMENT TECHNOLOGIES
7230 HOLLISTER AVENUE
GOLETA, CA 93117 USA
P. 805 682 0842 F. 805 682 9434



C-130 CAPABILITIES

PACSCI EMC

CARTRIDGE, FIRE EXTINGUISHER

P/N 4199-1

NSN 1377-00-677-6281

This Pressure Cartridge is an electro explosive device with an 18AWG insulated leadwire per MIL-W-16878 Type C. Upon application of firing current, the bridgewire explosive prime charge is activated igniting the main charge producing a nominal pressure of 3,250 psi in a 3 cc volume.

PERFORMANCE DATA:

NO-FIRE	.5 amp maximum
ALL-FIRE POWER	18 volts minimum at bridgewire
ALL-FIRE	1.5 amps minimum
BRIDGEWIRE RESISTANCE	1 ± .07 ohms
CONTINUITY CURRENT	.2 amp maximum; for repeated checkout .012, amp recommended
INSTALLATION TORQUE	55 ± 5 inch pounds
PRESSURE OUTPUT	2,500 to 4,000 psig in 3 cc volume
TIME FROM APPLICATION OF 18 VOLTS TO PEAK PRESSURE	15 milliseconds maximum
OPERATING TEMPERATURE RANGE	-65°F to +160°F
OPERATING ALTITUDE	50,000 feet maximum
LEADWIRE TO WITHSTAND	20 pound pull on terminal



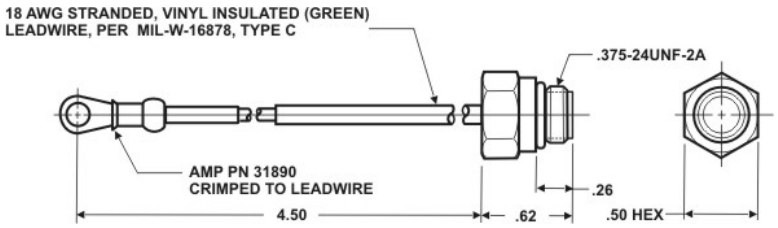

CARLOS DIAZ
BD MANAGER
CANADA & LATAM
carlos@iptsb.com

NGEE SING LOH
BD DIRECTOR
ASIA/PAC
nsloh@iptsb.com

MARC VAN SPRANG
BD MANAGER
EMEA
marc@iptsb.com

AYOUP JARRAI
BD MANAGER
EMEA
ayoup@iptsb.com

HAIDER LONE
SR. BD MANAGER
EMEA
haider.lone@iptsb.com

INTEGRATED PROCUREMENT TECHNOLOGIES
7230 HOLLISTER AVENUE
GOLETA, CA 93117 USA
P. 805 682 0842 F. 805 682 9434



THE POWER OF PARTNERSHIP

C-130 CAPABILITIES

AEROFLUIDPRODUCTS

P/N	DESCRIPTION	NSN
13F32	DISK ASSY, BRAKE	6105-00-757-3613
15F2	FILTER, RADIO FREQUNECY INTERFERENCE	5915-00-921-3375
2624125-1	GEAR, SPUR	3020-01-289-5594
2624126-1	GEAR, INTERNAL	3020-01-281-8602
2624127-1	PROGRAMMER	5865-01-437-3373
4298127-1	WIRE ROPE ASSEMBLY, SINGLE LEG	4010-01-513-4701
5145-00-1	VALVE, FLOW CONTROL	4810-01-472-1429
7173-286	SPACER, STRAIGHT	5365-01-519-6713
8377-3	SCREW, ADJUSTING, SUP	1680-01-270-7661
880124	FOLLOWER, JACKSCREW	1680-00-686-1863
880125	STOP, ACTUATOR	1680-00-686-1864
880131	CLUTCH ASSEMBLY	2530-01-097-2227
880132	GEAR, SPUR	3020-00-758-6346
880137	PIN, STRAIGHT, HEADLESS	5315-01-315-0870
880140	GEAR CLUSTER	3020-01-127-0507
880141	GEAR, SPUR	3020-00-686-1866
880154-1	SPACER, SLEEVE	5365-00-762-2938
880173	WASHER	5310-01-109-2686

P/N	DESCRIPTION	NSN
880191-1	WORMSHAFT, ACTUATOR	1680-01-417-3456
880193-1		
880199	PARTS KIT, ACTUATOR	1680-00-686-1880
880204-3	FILTER SUBASSEMBLY	5915-01-416-8113
880T100-3	ACTUATOR, ELECTRO-MECHANICAL, LINEAR	1680-01-329-7411
880T100R	ACTUATOR, ELECTRO-MECHANICAL, LINEAR	1680-00-073-8204
A3-093X500	PIN	
A3-093X625	PIN	
TS1000-42		
304A-143GC	BAL-SEAL	
328872		
502606	SPRING, HELICAL, COMPRESSION	5360-00-680-4670
502618	WASHER FLAT	5310-01-160-3975
731303	BODY, LOWER	2915-01-035-7702
731701	SOLENOID, ELECTRICAL	5945-00-933-8654
765000	SUPPRESSOR, SURGE	1680-00-073-0841
765012-11		
9440-11	WINCH,AIRCRAFT MOUNTED	1680-01-385-3219

CARLOS DIAZ
BD MANAGER
CANADA & LATAM
carlos@iptsb.com

NGEE SING LOH
BD DIRECTOR
ASIA/PAC
nsloh@iptsb.com

MARC VAN SPRANG
BD MANAGER
EMEA
marc@iptsb.com

AYOUP JARRAI
BD MANAGER
EMEA
ayoup@iptsb.com

HAIDER LONE
SR. BD MANAGER
EMEA
haider.lone@iptsb.com

INTEGRATED PROCUREMENT TECHNOLOGIES
7230 HOLLISTER AVENUE
GOLETA, CA 93117 USA
P. 805 682 0842 F. 805 682 9434



THE POWER OF PARTNERSHIP

C-130 CONTROL WHEEL UPGRADE

Adams Rite Aerospace

PART NUMBER	DESCRIPTION	NSN
1902-7	CONTROL WHEEL, AIRCRAFT	1680-00-673-8818
1902-8	CONTROL WHEEL, AIRCRAFT	1680-00-674-7581
1902-9	CONTROL WHEEL, AIRCRAFT	1680-00-707-7134
1902-10	CONTROL WHEEL, AIRCRAFT	1680-00-706-0101
53263-1	WHEEL ASSY - PILOT CONTROL	1680-01-483-3242
53263-2	CONTROL WHEEL, AIRCRAFT	1680-01-483-3244
53263-5		
53263-6		
53263-7	CONTROL WHEEL, PILOT	1680-01-483-3242
53263-8	CONTROL WHEEL, CO-PILOT	1680-01-483-3244
3350972-5	COLUMN ASSY-CONTROL, FLIGHT STATION (PILOT)	1680-01-439-3987
3350972-6	COLUMN ASSY-CONTROL, FLIGHT STATION (CO-PILOT)	1680-01-439-3988

WE ALSO OFFER FN & REPAIR COLUMN ASSEMBLIES

- P/N 3350972-5 includes P/N 53263-7 Control Wheel, Pilot
- P/N 3350972-6 includes P/N 53263-8 Control Wheel, Co-Pilot



REPAIR PROGRAM

- TTE included in repair price once repair is performed
- Switches to be replaced (this varies based on evaluation)
  a) Transducer
  b) Trim Switch
  c) Rocker Switches (2 pcs)
- Wire harness and insulation replaced entirely
- All repairs are performed after the TTE report and FFP quote is approved by the customer
- Acceptance Test Procedure (ATP) is performed on a complete repaired wheel
- Normal Repair TAT 30 days (after customer approval of quote)
- Repair Warranty is 12 months from invoice date

CARLOS DIAZ
BD MANAGER
CANADA & LATAM
carlos@iptsb.com

NGEE SING LOH
BD DIRECTOR
ASIA/PAC
nsloh@iptsb.com

MARC VAN SPRANG
BD MANAGER
EMEA
marc@iptsb.com

AYOUP JARRAI
BD MANAGER
EMEA
ayoup@iptsb.com

HAIDER LONE
SR. BD MANAGER
EMEA
haider.lone@iptsb.com

INTEGRATED PROCUREMENT TECHNOLOGIES
7230 HOLLISTER AVENUE
GOLETA, CA 93117 USA
P. 805 682 0842 F. 805 682 9434

Adams Rite Aerospace

CAPABILITIES: HANDLES & SWITCHES

PART NUMBER	DESCRIPTION	NSN
1401	HANDLE	5340-00-672-9842
2358	GRIP, HANDLE	5340-01-504-4298
1102-3	HANDLE, BOW	5340-00-634-7793
AR69	HANDLE, DOOR	1680-00-787-1254
AR70	HANDLE	5340-00-597-3140
612115-2	SWITCH	
612115-4	SWITCH	
51183	LATCH ASSEMBLY, AIRCRAFT	1560-01-550-5652
67749	HANDLE UNIT, DOOR	1680-01-550-8497
5700-2	BRAKE ASSY., DRAG, SPO (C/KC-130)	1680-00-707-5075
69565	COVER	
69829	BLUE SWITCH	
32011-11	SWITCH, PUSH BUTTON	
4532-3	HANDLE, DOOR	
53234-11	JOYSTICK, DATA ENTRY	
69566-3	TRIGGER GUARD MACHING	



CARLOS DIAZ
BD MANAGER
CANADA & LATAM
carlos@iptsb.com

NGEE SING LOH
BD DIRECTOR
ASIA/PAC
nsloh@iptsb.com

MARC VAN SPRANG
BD MANAGER
EMEA
marc@iptsb.com

AYOUP JARRAI
BD MANAGER
EMEA
ayoup@iptsb.com

HAIDER LONE
SR. BD MANAGER
EMEA
haider.lone@iptsb.com

INTEGRATED PROCUREMENT TECHNOLOGIES
7230 HOLLISTER AVENUE
GOLETA, CA 93117 USA
P. 805 682 0842 F. 805 682 9434



C-130 ENGINE FUEL HEATER

TRIUMPH™

The Fuel Heater is engine-mounted with fluid connections to both the engine fuel supply system and the engine lube oil system. The heater provides fuel heating for fuel de-icing, using engine lube oil flow during aircraft cold start and cold operation periods.

TTS P/N	ALT P/N	DESCRIPTION	NSN
UA524240	695810-3	FUEL HEATER	2915-00-789-1102

REPAIR PROGRAM

- Triumph has the expertise only the OEM can offer
- OEM repairs are more dependable, increase MTBF and cost less long-term
- Repair price is all inclusive
- TAT 45 days approx

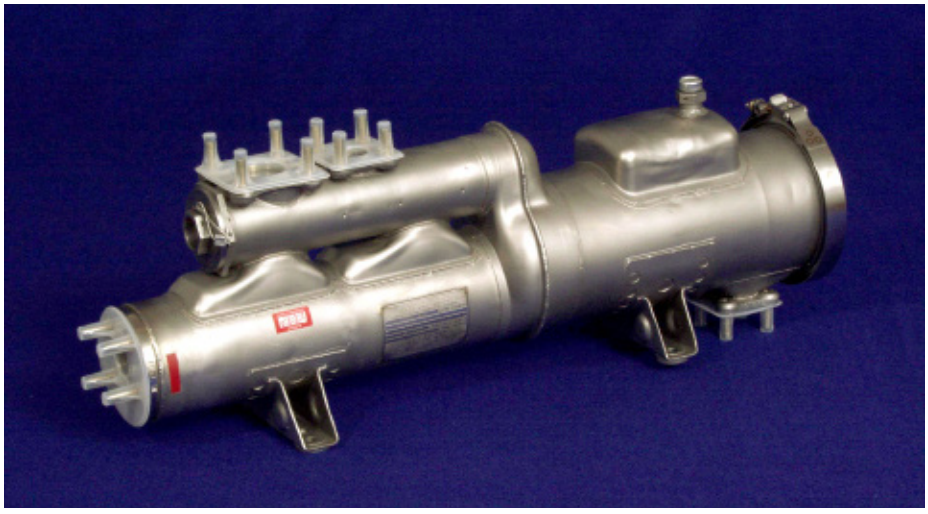

CARLOS DIAZ
BD MANAGER
CANADA & LATAM
carlos@iptsb.com

NGEE SING LOH
BD DIRECTOR
ASIA/PAC
nsloh@iptsb.com

MARC VAN SPRANG
BD MANAGER
EMEA
marc@iptsb.com

AYOUP JARRAI
BD MANAGER
EMEA
ayoup@iptsb.com

HAIDER LONE
SR. BD MANAGER
EMEA
haider.lone@iptsb.com

INTEGRATED PROCUREMENT TECHNOLOGIES
7230 HOLLISTER AVENUE
GOLETA, CA 93117 USA
P. 805 682 0842 F. 805 682 9434



THE POWER OF PARTNERSHIP

C-130 HP SGNSC

PCI Gases

The HP SGNSC provides 99.5% high purity nitrogen and can service any type of aircraft nitrogen need at the flight line or shop level.

N2 Purity Option 1 Option 2	99.5% (HP SGNSC) 95.5% (SGNSC)
Pressure	8 - 10 scfm @ 4400 psi (HP SGNSC)
Weight	Approximately 3000 lbs
Dimensions	80" Long x 72" Wide x 63" Tall
Powered by	Diesel fuel, JP-4, JP-5, JP-8, or Jet A
On board storage	830 scf on board nitrogen storage at 4400 psi

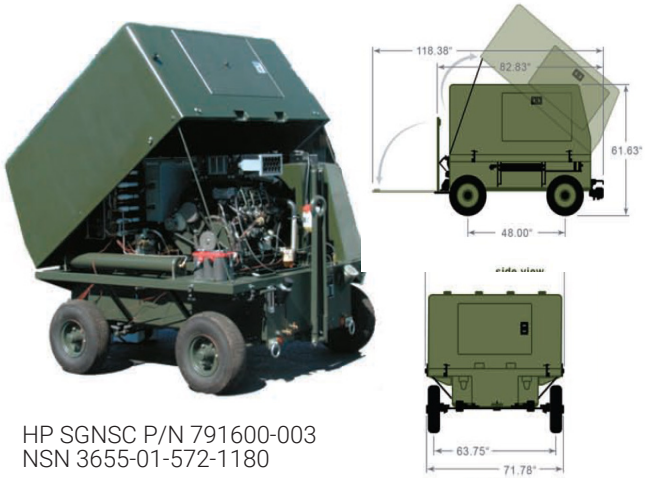

HP SGNSC P/N 791600-003
NSN 3655-01-572-1180

SGNSC P/N 791600-001
NSN 3655-01-463-3338

SYSTEM ADVANTAGES

Nitrogen, when you need it, where you need it. Obsolete cylinder systems are frequently empty or too low in pressure to be usable when you need them the most. Our cart is always ready with nitrogen at high pressure, available for immediate use.

Eliminates cross contamination problems. Serious aircraft grounding damage is often caused by the failure of critical seals. The root cause of these failures has been traced to contamination, rust and dirt introduced from the nitrogen cylinders. The sealed system on the SGNSC eliminates the primary cause of this contamination.

Totally eliminates the logistical tail. Once deployed to the forward location, the SGNSC requires no additional logistical support beyond the available aircraft jet fuel.

SYSTEM DESIGN

PCI's SGNSC is self-contained and integrated on a four wheel, tow-able trailer. All components are mounted inside a weatherproof fiberglass enclosure.

The SGNSC will run on diesel fuel, JP-4, JP-5, JP-8, or Jet A. Any fuel used in the aircraft will be compatible.

On-board nitrogen purity analyzer. Continuously and automatically maintains the nitrogen purity.

Nitrogen supply pressure is automatically regulated. System turns on at the specified minimum pressure and off at maximum pressure.

Minimum operator requirements. Reduced to starting and stopping the unit. Safety shutdowns are automatically activated.

Doors at all check points. The lightweight, fiberglass cover tilts up for increased access, and is removable by two persons (no tools required) for total access.

CARLOS DIAZ
BD MANAGER
CANADA & LATAM
carlos@iptsb.com

NGEE SING LOH
BD DIRECTOR
ASIA/PAC
nsloh@iptsb.com

MARC VAN SPRANG
BD MANAGER
EMEA
marc@iptsb.com

AYOUP JARRAI
BD MANAGER
EMEA
ayoup@iptsb.com

HAIDER LONE
SR. BD MANAGER
EMEA
haider.lone@iptsb.com

INTEGRATED PROCUREMENT TECHNOLOGIES
7230 HOLLISTER AVENUE
GOLETA, CA 93117 USA
P. 805 682 0842 F. 805 682 9434



THE POWER OF PARTNERSHIP

C-130 CAPABILITIES

Chemring Energetic Devices

The upgraded System Communication and Oxygen Tester (SCOT) integrates several required items of test equipment into a single, portable, rugged, self-contained test unit. The SCOT equals or exceeds the USAF requirements for today's helmets, masks, Chemical Defense, Anti-G Garments, associated oxygen connections, and communication systems. This test equipment eliminated the need for high-pressure oxygen cylinders, hazardous materials, and it will significantly reduce supporting man-hours, deployment costs, and mobility footprint.

The SCOT is fully operational and in use by AFSOC, AFRC, AETC, ACC, AMC, and ANG throughout the world. This tester replaces test equipment such as the MQ-1, MH-2, and DMH-1. It is portable, self-contained, and USAF approved.

CAGE CODE	P/N	DESCRIPTION	NSN
93455	6112300-1	TEST STAND, AIRCRAFT OXYGEN SYSTEM	4920-01-691-9686

FEATURES

- Menu driven automated testing
- Portable
- Unrestricted transport on military aircrafts
- Eliminated the need for multiple test sets
- Self-contained, no bottled gas required
- Software upgradeable
- Performs helmet/mask fitting and troubleshooting
- Microphone and earphones testing
- Performs G-suit leak testing
- Provides proper pressure and flows to enable complete functional testing or aircrew life support equipment
- Designed for in-shop, field and deployments
- Rugged, proven design

SPECIFICATIONS

- Case - test equipment case with removable hinged cover
- Size - 15.06"L x 12.61"W x 13.25"H
- Weight - 39 lbs. max
- Power - 108-132VAC/216-264VAC



CARLOS DIAZ
BD MANAGER
CANADA & LATAM
carlos@iptsb.com

NGEE SING LOH
BD DIRECTOR
ASIA/PAC
nsloh@iptsb.com

MARC VAN SPRANG
BD MANAGER
EMEA
marc@iptsb.com

AYOUP JARRAI
BD MANAGER
EMEA
ayoup@iptsb.com

HAIDER LONE
SR. BD MANAGER
EMEA
haider.lone@iptsb.com

INTEGRATED PROCUREMENT TECHNOLOGIES
7230 HOLLISTER AVENUE
GOLETA, CA 93117 USA
P. 805 682 0842 F. 805 682 9434



THE POWER OF PARTNERSHIP

C-130 MAIN BATTERY

EnerSys
Power/Full Solutions

All EnerSys Hawker aviation battery products are classified as non-hazardous and unrestricted for land, sea or air transportation when correctly packed. This battery needs very little maintenance, has no memory effect, and doesn't suffer from fading. Depending on application, operation and use, the battery can last up to 5 years allowing a fit-and-forget installation. Maintenance, when required, is simple and quick; only a visual inspection and a capacity test are needed. Thus a dedicated lead-acid battery shop is not required, as the batteries can be serviced in a NiCd shop.

APPLICATION	PART NUMBER	NSN	SPEC
C-130 ELCON CONNECTOR	F0777-3021	6140-01-266-1633	MIL D8565/5-1
C-130 CANNON CONNECTOR	F0777-3022	6140-01-266-1634	MIL D8565/5-2

ADVANTAGES

- Dispatched from the manufacturer's factory fully charged
- Inspection free storage life of 2 years when stored at or under 25ºC (77ºF)
- Completely sealed and virtually maintenance-free
- Fully supports aerobatic operations
- Long life, pure lead grids
- Recovers from deep discharge
- Vents and thermal sensors not required
- Easy commissioning, normally consisting of only a voltage check
- Classified as non-hazardous and unrestricted for transportation when correctly packed.



CARLOS DIAZ
BD MANAGER
CANADA & LATAM
carlos@iptsb.com

NGEE SING LOH
BD DIRECTOR
ASIA/PAC
nsloh@iptsb.com

MARC VAN SPRANG
BD MANAGER
EMEA
marc@iptsb.com

AYOUP JARRAI
BD MANAGER
EMEA
ayoup@iptsb.com

HAIDER LONE
SR. BD MANAGER
EMEA
haider.lone@iptsb.com

INTEGRATED PROCUREMENT TECHNOLOGIES
7230 HOLLISTER AVENUE
GOLETA, CA 93117 USA
P. 805 682 0842 F. 805 682 9434



C-130 CAPABILITIES

Whippany Actuation Systems

PART NUMBER	DESCRIPTION	NSN
L16-107	LINEAR ACTUATOR	1680-01-008-7442
L16-8-1	LINEAR ACTUATOR	1680-00-720-5810
L16-8-3	LINEAR ACTUATOR	1680-00-720-5810
L16-8-5	LINEAR ACTUATOR	1680-01-378-1631
R5170M34-4	LINEAR ACTUATOR	1680-00-426-5616

CARLOS DIAZ
BD MANAGER
CANADA & LATAM
carlos@iptsb.com

NGEE SING LOH
BD DIRECTOR
ASIA/PAC
nsloh@iptsb.com

MARC VAN SPRANG
BD MANAGER
EMEA
marc@iptsb.com

AYOUP JARRAI
BD MANAGER
EMEA
ayoup@iptsb.com

HAIDER LONE
SR. BD MANAGER
EMEA
haider.lone@iptsb.com

INTEGRATED PROCUREMENT TECHNOLOGIES
7230 HOLLISTER AVENUE
GOLETA, CA 93117 USA
P. 805 682 0842 F. 805 682 9434



THE POWER OF PARTNERSHIP

C-130 CAPABILITIES

BAE SYSTEMS

The ALE-47 Airborne Countermeasures Dispenser System identifies and defeats infrared and radio frequency missiles.

The ALE-47 system uses information from integrated electronic warfare sensors such as radar warning receivers and missile warning receivers to determine the correct response to defeat infrared and radio frequency guided missiles. The cockpit crew has complete control of their threat situation by choosing to operate in any of the four modes: automatic, semiautomatic, manual, and bypass.

BENEFITS

- Combat proven
- More than 3,000 systems installed
- Operating in 30 countries
- Integrates with EW sensors
- Interchangeable with obsolete ALE-40/ ALE-39 and M-130 systems
- Uses U.S. and NATO standard and new RF and infrared decoys
- Glass cockpit compatible



COCKPIT DISPLAY UNIT



PROGRAMMER



DISPENSER ASSEMBLY



MAGAZINE ASSEMBLY

PART NUMBER	DESCRIPTION	NSN
179720-0001	SWITCH, SAFETY	5930-01-333-2196
179750-0001	DISPENSER	5865-01-334-8349
179740-0002	COCKPIT DISPLAY UNIT	5865-01-380-8046
179730-0005	PROGRAMMER	5865-01-437-3371
179730-0006	PROGRAMMER	5865-01-437-3373
179250-0003	SEQUENCER	5865-01-451-2868
179250-0012	SEQUENCER	5865-01-527-2187



SAFETY SWITCH

CARLOS DIAZ
BD MANAGER
CANADA & LATAM
carlos@iptsb.com

NGEE SING LOH
BD DIRECTOR
ASIA/PAC
nsloh@iptsb.com

MARC VAN SPRANG
BD MANAGER
EMEA
marc@iptsb.com

AYOUP JARRAI
BD MANAGER
EMEA
ayoup@iptsb.com

HAIDER LONE
SR. BD MANAGER
EMEA
haider.lone@iptsb.com

INTEGRATED PROCUREMENT TECHNOLOGIES
7230 HOLLISTER AVENUE
GOLETA, CA 93117 USA
P. 805 682 0842 F. 805 682 9434

BAE SYSTEMS

ALE-47 SUPPORT EQUIPMENT

Countermeasures Dispensing Test Sets (CDTS)

- P/N 188100-7001
- Safety requirement for operational use
  - Stray Voltage Testing
- End-to-End System Testing
  - Suitable for Engineering Lab, System Integration Lab, System Troubleshooting, and Flight Line use



CDTS

Memory Load Verifier (MLV)

- Loads/Verifies ALE-47 Programmer Software
  - Mission Data File (MDF)
  - Operational Flight Program (OFP)
- MIL-STD-**1553 Interface**
- **Hosted on a Ruggedized COTS computer**
  - **Suitable for Flight**line Use
- Can be combined with TMG on single computer



MLV

Threat Matrix Generator (TMG)

- COTS computer configured with BAE Systems proprietary software
- Create and edit Mission Data Files (MDFs) for the ALE-47 Programmer
- Each TMG version supports MDF development for all aircraft with the same ALE-47 Operational Flight Program (OFP)
- Data screens are grouped in a logical manner, promotes ease of use
- Validates values entered are within acceptable ranges

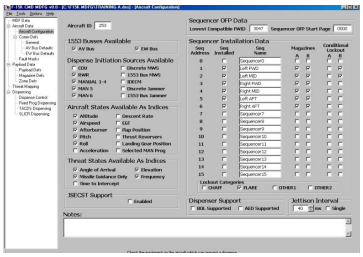

Sample **TMG** Screens

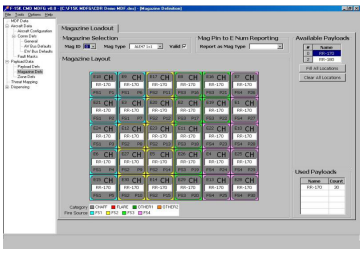



SLTS

Intermediate-Level Tester

I-level tester is the Shop Level Test Set (SLTS)

- Acceptance Testing and Intermediate Level Testing of ALE-47 Electronic LRUs
  - Same Acceptance Test Procedure (ATP) performed at the OEM
- Identifies faults at the Circuit Card Assembly (CCA) level
- New technology refreshed in 2015
- Year over year contracts for international customers ensures upgrades and availability
- Single SLTS can test all ALE-47 LRUs across multiple platform types

Logistics Support

- Direct Commercial Sales (DCS) arrangement recommended
  - Foreign Military Sales (FMS) not required
- Spares can be positioned at end user facilities
- With SLTS, I-level repairs can be performed in-country
- Spares positioned at BAE Systems OEM factory
- Reduced lead time
- Depot repairs at BAE Systems OEM factory

CARLOS DIAZ
BD MANAGER
CANADA & LATAM
carlos@iptsb.com

NGEE SING LOH
BD DIRECTOR
ASIA/PAC
nsloh@iptsb.com

MARC VAN SPRANG
BD MANAGER
EMEA
marc@iptsb.com

AYOUP JARRAI
BD MANAGER
EMEA
ayoup@iptsb.com

HAIDER LONE
SR. BD MANAGER
EMEA
haider.lone@iptsb.com

INTEGRATED PROCUREMENT TECHNOLOGIES
7230 HOLLISTER AVENUE
GOLETA, CA 93117 USA
P. 805 682 0842 F. 805 682 9434

BAE SYSTEMS

C-130 LOADMASTER SEAT

Developed as a required crashworthy seat, it is built to protect the loadmaster during harsh landings and other unexpected aircraft mishaps. The BAE Systems C-130 seat is fully repositionable for maximum effectiveness and comfort, and can be equipped with ballistic protection up to NIJ Level IIIA.

KEY FEATURES

- Certified for C-130E, C-130H/H2 H2.5/3 and C-130J/C-130J-30
- USAF TCTO 1C-130-2010
- Energy-absorbing, crash attenuating
- Crash performance verified through extensive dynamic testing
- Accommodates NIJ Level IIIA ballistic protection

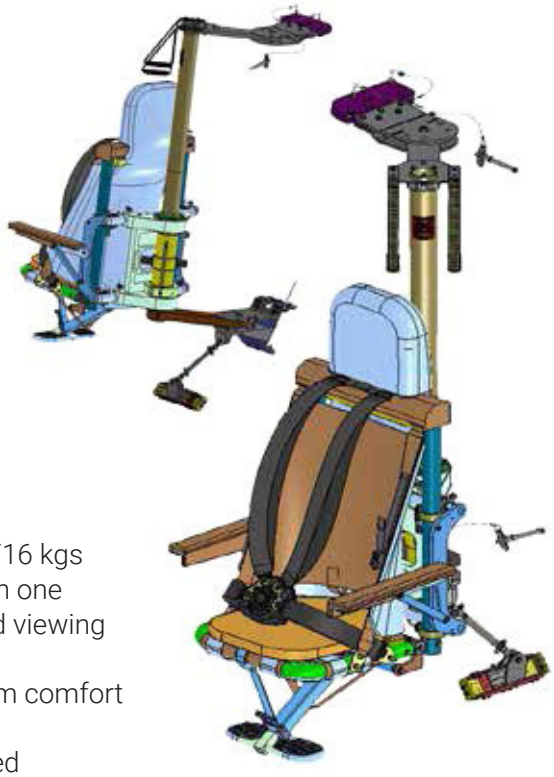



STANDARD FEATURES

- Seat weighs less than 35 lbs/16 kgs
- Can be positioned in less than one minute to various heights and viewing angles
- Designed to provide maximum comfort on long missions
- Seat installed and repositioned within the aircraft in minutes using permanently installed brackets; "No tools required"
- Four-point restraint harness with inertia reel
- Group A hardware mounted permanently to aircraft structure; installed in less than 25 hours per seat, 50 hours per aircraft with no degradation to aircraft structure
- Ergonomically designed to include padded arm rests, head support and foot rests

Lightweight, crashworthy, fixed wing crew seat

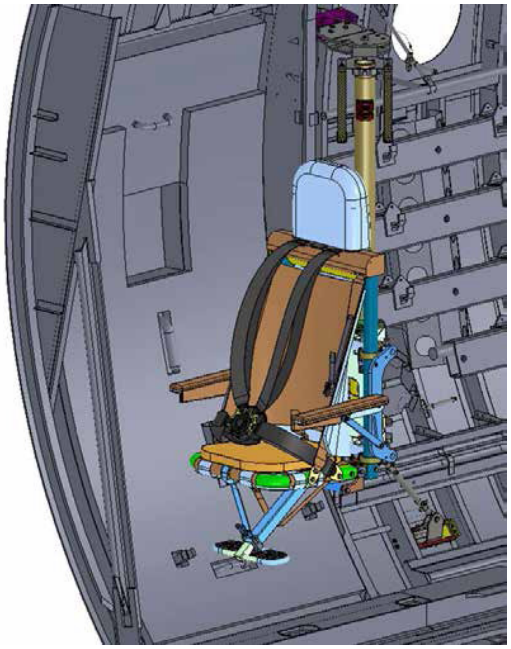

BAE Systems' C-130 Loadmaster Seat is designed to meet a critical need of the United States Air Force.

CARLOS DIAZ
BD MANAGER
CANADA & LATAM
carlos@iptsb.com

NGEE SING LOH
BD DIRECTOR
ASIA/PAC
nsloh@iptsb.com

MARC VAN SPRANG
BD MANAGER
EMEA
marc@iptsb.com

AYOUP JARRAI
BD MANAGER
EMEA
ayoup@iptsb.com

HAIDER LONE
SR. BD MANAGER
EMEA
haider.lone@iptsb.com

INTEGRATED PROCUREMENT TECHNOLOGIES
7230 HOLLISTER AVENUE
GOLETA, CA 93117 USA
P. 805 682 0842 F. 805 682 9434

BAE SYSTEMS

AIRCRAFT ARMOR SYSTEMS

Unique and lightweight ceramic, transparent and soft aircraft armor solutions for fixed-wing and rotary-wing aircraft

BAE Systems prides itself on over 30 years of experience in developing and manufacturing lightweight composite armor protection systems for military aircraft. Utilizing our expertise in ceramic composite armor, BAE Systems introduced the first successful military armored crashworthy crew seat for the UH-60 Black Hawk aircraft in 1977.



Monolithic Armored Wing Panel



Monolithic Floor Armor Panel



Monolithic Wall Armor Panel

KEY FEATURES

- Monolithic armor technology accomodates curvatures and saves weight
- Variety of armor systems available to meet specific requirements
- Industry leader in integration and qualification of complex armor systems meeting stringent crash, environmental and impact requirements
- Lightest weight ceramic armor technology available
- Unmatched transparent armor technology

Floor Armor

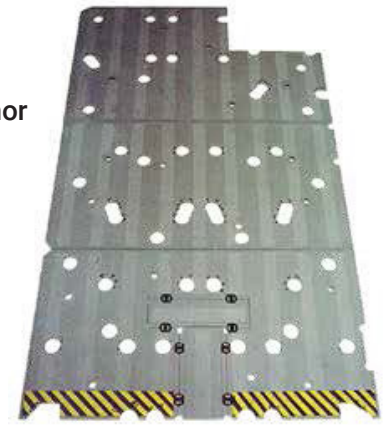

CARLOS DIAZ
BD MANAGER
CANADA & LATAM
carlos@iptsb.com

NGEE SING LOH
BD DIRECTOR
ASIA/PAC
nsloh@iptsb.com

MARC VAN SPRANG
BD MANAGER
EMEA
marc@iptsb.com

AYOUP JARRAI
BD MANAGER
EMEA
ayoup@iptsb.com

HAIDER LONE
SR. BD MANAGER
EMEA
haider.lone@iptsb.com

INTEGRATED PROCUREMENT TECHNOLOGIES
7230 HOLLISTER AVENUE
GOLETA, CA 93117 USA
P. 805 682 0842 F. 805 682 9434

BAE SYSTEMS

COMPREHENSIVE DEVELOPMENT CAPABILITIES AND HIGH VOLUME MANUFACTURING

- Armor and composite production areas encompass more than 100,000 sq. ft.
- Work is completed by a team of skilled technicians trained in composite fabrication techniques and specific product requirements
- Armor pre-fit and bonding operations
- In-house ballistic test laboratory
- In-depth understanding of aircraft integration and qualification requirements

TRANSPARENT ARMOR

BAE Systems has developed and patented, and is producing a new liquid-castable transparent polyurethane, Cleargard®*, which provides superior ballistic performance with optimal clarity.

Cleargard's advantages are characterized by:

- Unmatch monolithic performance
- Lower density than acrylic or polycarbonate
- High-impact resistance
- Excellent optical clarity
- High ductility
- High thermal and chemical resistance
- Compatible with a variety of dye packagest and coatings
- Castable to complex shapes or sheet form

STANDARD ARMOR FEATURES

- Lightest weight and lowest areal density (weight per unit area) in the industry
- Defeats Armor Piercing (AP) threats for 7.62 mm and greater calibers
- Complex curvatures, unusual shapes as well as flat components
- Flexibility for hole size and location
- Wide variety of qualified mounting/ attachment methods
- Environmentally tested to MIL-STD-810
- Meets FAR 25 flammability requirements
- Secured for crash and impact loads

MONOLITHIC ARMOR

Our monolithic ceramic technology allows for:

- Minimum amounts for material for reduced weight
- Elimination of raised edges and joints
- Minimized parts counts and costs
- Retained multi-hit performance



THE MONOLITHIC ADVANTAGE IS CLEAR:

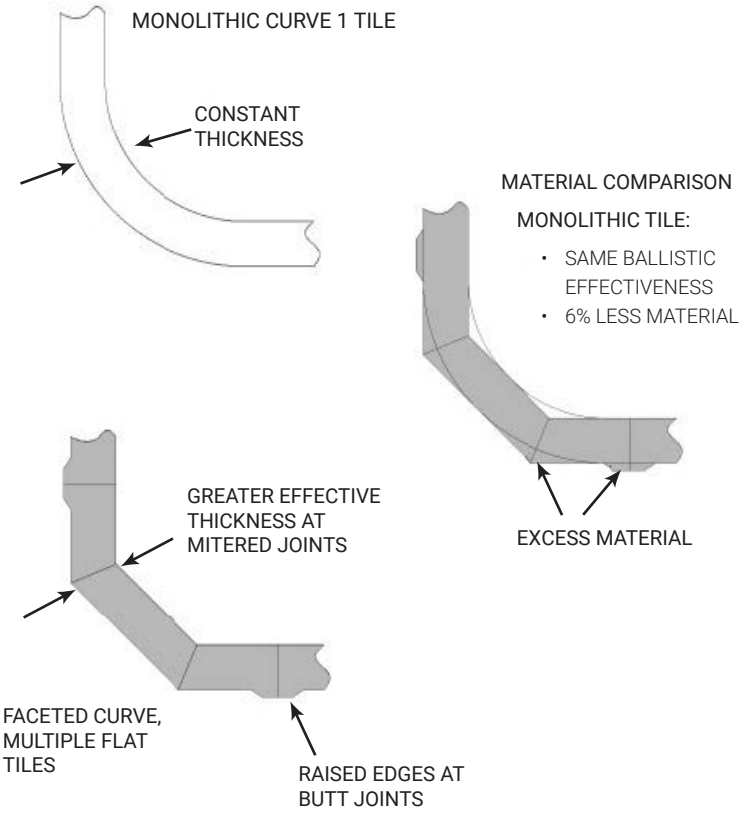

*Cleargard® is a registered trademark of BAE Systems

CARLOS DIAZ
BD MANAGER
CANADA & LATAM
carlos@iptsb.com

NGEE SING LOH
BD DIRECTOR
ASIA/PAC
nsloh@iptsb.com

MARC VAN SPRANG
BD MANAGER
EMEA
marc@iptsb.com

AYOUP JARRAI
BD MANAGER
EMEA
ayoup@iptsb.com

HAIDER LONE
SR. BD MANAGER
EMEA
haider.lone@iptsb.com

INTEGRATED PROCUREMENT TECHNOLOGIES
7230 HOLLISTER AVENUE
GOLETA, CA 93117 USA
P. 805 682 0842 F. 805 682 9434

BAE SYSTEMS

WALL STYLE AIRCRAFT TROOP SEAT

IMPROVED SAFETY

BAE Systems' crash resistant troop seat is the first Wall Style Troop Seat to be successfully tested in dynamic crash conditions.*

– 30º nose down surpassing 14 Gs
– 10º yaw surpassing 16 Gs

All fabric meets the FAR 25.853 vertical burn test requirements by utilizing inherently flame-resistant textile materials and flame-retardant treated nylon webbings and tapes.

DURABILITY

Utilizing quality fabrics and developing rugged designs distinguishes BAE Systems and its Wall Style Troop Seat from existing in-service, bench-type seats. High strength aluminum tubing and durable fabric withstands wear and tear and provides superior safety. This provides significant cost reductions in replacement and repair expenses.

OCCUPANT COMFORT

The Wall Style Troop Seat has added comfort by ensuring the occupant's clearance of the seat structure. The seat back is made from a single piece of material designed to minimize equipment snags and provides continuous support.



Lightweight, crashworthy, fixed wing troop seat

SEAT WEIGHTS

1-Man: 6 lb (2.8 kg)

2-Man: 10 lb (4.9 kg)

3-Man: 15 lb (7.0 kg)

CARLOS DIAZ
BD MANAGER
CANADA & LATAM
carlos@iptsb.com

NGEE SING LOH
BD DIRECTOR
ASIA/PAC
nsloh@iptsb.com

MARC VAN SPRANG
BD MANAGER
EMEA
marc@iptsb.com

AYOUP JARRAI
BD MANAGER
EMEA
ayoup@iptsb.com

HAIDER LONE
SR. BD MANAGER
EMEA
haider.lone@iptsb.com

INTEGRATED PROCUREMENT TECHNOLOGIES
7230 HOLLISTER AVENUE
GOLETA, CA 93117 USA
P. 805 682 0842 F. 805 682 9434

BAE SYSTEMS

Structural Integrity and Seat Comfort for Wall Style Aircraft Troop Seat

Features	MIL-S-5804 Existing Seat	BAE Systems Seat
Interfaces with Existing C-130, C-141 and KC-135 Installation Points	✓	✓
Fabric Assembly Materials Meets FAR 25.853 vertical burn requirement		✓
Eliminates Spreader Bar Contact with Occupant		✓
Improved Spreader Bar Fitting Connection to Aircraft Support Bar Machined aluminum for better durability		✓
Dynamic Strength Verification Dynamic tests performed meet all requirements		✓
Static Testing Test loads applied with contoured anthropomorphic block to highest standards		✓
Seat Back Configuration Seat back is made from the same Aramid material as the seat pan to provide a continuous, durable support surface that does not snag equipment and is adjustable to accommodate a backpack or parachute		✓
Environmental Testing Compliance to MIL-STD-810F		✓
Inter-Seat Fabric Connectors Continuous zipper connection for each seat bottom and seat back connection for added strength		✓
Fabric Connection Fabric attached with machine screws for ease of repair		✓
Floor Fitting Release Easily grasp any part of the leg tube for quick release		✓
Seat Bottom Double layer for improved strength and wear, adjustable to eliminate sag		✓

USAF Performance Requirements**

Configuration	ATD Weight (lb)	Attitude	Velocity (fps)	Deceleration (Gs)	Qualification Test Result
1-Man, 2-Man, 3-Man	250/occupant	30° Pitch Down	35	14	Pass
1-Man, 2-Man, 3-Man	250/occupant	10° Yaw	44	16	Pass

**Testing conducted using 250 lb anthropomorphic test dummies*

*** Reference USAF Performance Requirements document PD990315*

CARLOS DIAZ
BD MANAGER
CANADA & LATAM
carlos@iptsb.com

NGEE SING LOH
BD DIRECTOR
ASIA/PAC
nsloh@iptsb.com

MARC VAN SPRANG
BD MANAGER
EMEA
marc@iptsb.com

AYOUP JARRAI
BD MANAGER
EMEA
ayoup@iptsb.com

HAIDER LONE
SR. BD MANAGER
EMEA
haider.lone@iptsb.com

INTEGRATED PROCUREMENT TECHNOLOGIES
7230 HOLLISTER AVENUE
GOLETA, CA 93117 USA
P. 805 682 0842 F. 805 682 9434

BAE SYSTEMS

The AN/ARC-164 standard avionics radio provides the DoD and NATO standard anti-jam UHF voice communications in support of modern military operations.

- 10 watts AM; 25 KHz channel spacing
- Have Quick II ECCM
- Line-of-sight voice
- 2,000 hours demonstrated mean-time-between-failures (MTBF)
- COMSEC/secure speech compatible
- ANVIS Green A front panel lighting and electronic fill port
- Form, fit, function replacement for obsolete UHF radios
- Upgradeable in the field



CONFIGURATION	WIDTH (in)	HEIGHT (in)	DEPTH (in)	WEIGHT (lb)
RT-1504	4.98	4.730	8.32	8.84
RT-1505A	5.75	4.875	8.85	9.25
RT-1518C	5.75	4.875	8.85	9.25
RT-1614*	4.98	4.730	9.11	9.75
C-11718	5.75	4.875	5.44	4.32
MXF-243	5.74	2.980	5.45	3.00

MOUNTING CONFIGURATION	RT-1505A Panel	RT-1518C Panel	RT-1504 Remote	RT-1614 Remote
FREQUENCY RANGE	225.000 to 399.975 MHz			
NO. OF CHANNELS	UHF 7000 (including 20 preset and 1 Guard channel available from panel mount RT and the radio set control).			
MODULATION TYPE	AM			
PRIMARY POWER				
R/T	Receiver: 35 watts to 16 watts typical Transmitter: 110 watts to 85 watts typical at 24 to 33 Vdc			
CONTROL BOXES	20 watts at 24 to 33 Vdc			
CHANNEL TIME CHANGE	0.25 second maximum in normal mode			
AGC	+5, -4 dB from 4 µV to 0.5V (all receivers) (1 mV ref)			
SQUELCH				
ADJUSTMENT RANGE	0 to 4 µV minimum			
HYSTERESIS	2 to 8 dB			
ATTACK TIME	50 milliseconds maximum			
SELECTIVITY	Narrowband	Wideband		
6 dB	±12 kHz minimum	±35 kHz minimum		
40 dB	±25 kHz maximum			
60 dB		±75 kHz		
AUDIO OUTPUT POWER LEVEL	Normal 200mW Min (Adj)	Wideband		
VOLTAGE LEVEL		2.0 Vrms min		
LOAD IMPEDANCE	150 ohms	500 ohms		
RESPONSE	+1, -3 dB (300 to 3500 Hz)	+3, -5 dB (70 to 25 kHz)		
DISTORTION AT 50% MOD	10% maximum			
VOLTAGE LEVEL	35 dB	No squelch		
VOLTAGE LEVEL	37 dB	Not controlled		

CARLOS DIAZ
BD MANAGER
CANADA & LATAM
carlos@iptsb.com

NGEE SING LOH
BD DIRECTOR
ASIA/PAC
nsloh@iptsb.com

MARC VAN SPRANG
BD MANAGER
EMEA
marc@iptsb.com

AYOUP JARRAI
BD MANAGER
EMEA
ayoup@iptsb.com

HAIDER LONE
SR. BD MANAGER
EMEA
haider.lone@iptsb.com

INTEGRATED PROCUREMENT TECHNOLOGIES
7230 HOLLISTER AVENUE
GOLETA, CA 93117 USA
P. 805 682 0842 F. 805 682 9434

THE POWER OF PARTNERSHIP



C-130 CAPABILITIES

Columbus Jack
A TRONAIR COMPANY

AIRCRAFT JACKS
MODEL 8704-010
35 TON AXLE JACK
NSN 1730-01-013-4185



AIRCRAFT JACKS - NOSE
MODEL 55A6309
MANIFOLD KIT
NSN 1730-00-594-1730

MODEL 972-018
12 TON TRIPOD JACK
NSN 1730-01-384-1715

MODEL 50J25178
10 TON TRIPOD JACK
NSN 1730-00-516-2019

AIRCRAFT JACKS - WINGS
MODEL 53J6268
30 TON TRIPOD JACK
NSN 1730-00-516-2017

MODEL 8654-010
30 TON TRIPOD JACK
NSN 1730-01-068-1126



JACK TESTERS
MODEL 7054-020
PORTABLE JACK TESTER

MODEL 7186-010
STATIONARY JACK TESTER
NSN 1730-01-329-6355

BEAD BREAKERS
MODEL 9323-020
30 TON CAPACITY
NSN 4910-00-267-9126

MODEL 715J1000EX
25,200 LBS CAPACITY
NSN 4910-01-267-7191



WHEEL DOLLY
MODEL 9764-010
800 LBS CAPACITY
NSN 1730-00-529-8231



RECOVERY SYSTEMS
MODEL 48C7171
11 TON PNEUMATIC LIFTING BAG
NSN 1730-00-263-2962

CARLOS DIAZ
BD MANAGER
CANADA & LATAM
carlos@iptsb.com

NGEE SING LOH
BD DIRECTOR
ASIA/PAC
nsloh@iptsb.com

MARC VAN SPRANG
BD MANAGER
EMEA
marc@iptsb.com

AYOUP JARRAI
BD MANAGER
EMEA
ayoup@iptsb.com

HAIDER LONE
SR. BD MANAGER
EMEA
haider.lone@iptsb.com

INTEGRATED PROCUREMENT TECHNOLOGIES
7230 HOLLISTER AVENUE
GOLETA, CA 93117 USA
P. 805 682 0842 F. 805 682 9434

THE POWER OF PARTNERSHIP



C-130 CAPABILITIES

ACES SYSTEMS

VIPER-2E
4-CHANNEL ANALYZER

The Viper 2E Vibration and Performance Analyzer is a compact instrument with all the power of the Viper and Viper 2 platforms. Proven in the most challenging and harshest environments. Vibration and Acoustic Analysis on Jet Engines and Airframes, Transient Balance, Fan Trim Balance, and even Propeller Balance features are ready to go anywhere you are.



1. **TRANSIENT VIBRATION ANALYSIS**
   Accurate High-Speed Acceleration and/or Deceleration Transient Surveys
2. **TRANSIENT BALANCE**
   Save Time and Money by Collecting Data in a Single Sweep
3. **MIL-SPEC DESIGN**
   Ensure Reliability of Measurements in Harsh Environments

FEATURES

- Transient Balance yields test cell quality balancing results on-wing
- Direct PDF report generation to provide an easy summary of maintenance actions
- .CSV export of raw data for further analysis
- SmartTach speed and phase processing allows direct measurement of the engine speed signal
- Four-channel simultaneous data acquisition (10 spectra/second/channel) for speed and accuracy
- Optional Mil-Spec USB port for secure connection to encrypted Spindle Drives
- Housed in ZERO case for maximum environmental protection
- 1-year warranty plan for defects of components and workmanship
- Designed to address the cybersecurity requirements of DoD

CARLOS DIAZ
BD MANAGER
CANADA & LATAM
carlos@iptsb.com

NGEE SING LOH
BD DIRECTOR
ASIA/PAC
nsloh@iptsb.com

MARC VAN SPRANG
BD MANAGER
EMEA
marc@iptsb.com

AYOUP JARRAI
BD MANAGER
EMEA
ayoup@iptsb.com

HAIDER LONE
SR. BD MANAGER
EMEA
haider.lone@iptsb.com

INTEGRATED PROCUREMENT TECHNOLOGIES
7230 HOLLISTER AVENUE
GOLETA, CA 93117 USA
P. 805 682 0842 F. 805 682 9434

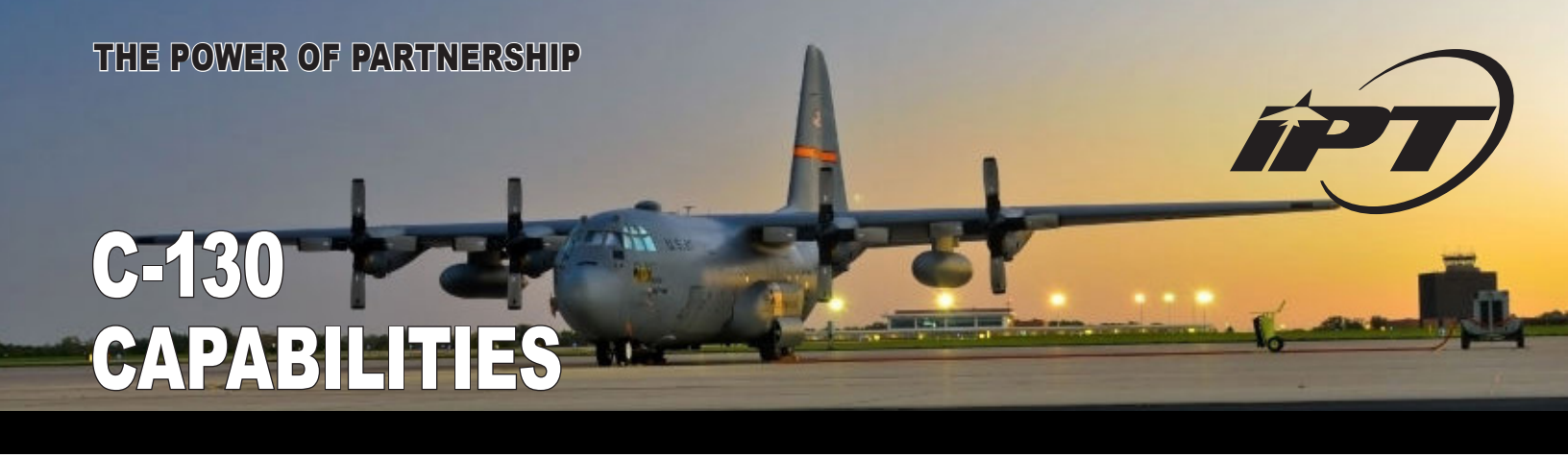

THE POWER OF PARTNERSHIP

C-130 CAPABILITIES

Rockmart Fuel Containment is the global leader in flexible MIL-SPEC aviation fuel tanks engineered for ballistic-tolerance and crashworthiness.

PRODUCTS

- Fuel Tanks
  - Crashworthy
  - Self-sealing
  - Complex geometries
- Accessories
  - Self-sealing doors
  - Baffles
  - Fuel cell liners
- Repair kits
- Fuel Sealants

SERVICES

- Fuel tank repairs
- Aircraft sealing
- Training

PART NUMBER	DESCRIPTION	NSN
2F1-6-37792-5	C-130 INBOARD LH FUEL TANK	
2F1-6-37792-6	C-130 INBOARD RH FUEL TANK	
2F1-6-37793-10	C-130 CENTER RH FUEL TANK	
2F1-6-37793-9	C-130 CENTER LH FUEL TANK	
2F1-6-37794-5	C-130 OTBD LH FUEL TANK	
2F1-6-37794-6	C-130 OTBD RH FUEL TANK	

CARLOS DIAZ
BD MANAGER
CANADA & LATAM
carlos@iptsb.com

NGEE SING LOH
BD DIRECTOR
ASIA/PAC
nsloh@iptsb.com

MARC VAN SPRANG
BD MANAGER
EMEA
marc@iptsb.com

AYOUP JARRAI
BD MANAGER
EMEA
ayoup@iptsb.com

HAIDER LONE
SR. BD MANAGER
EMEA
haider.lone@iptsb.com

INTEGRATED PROCUREMENT TECHNOLOGIES
7230 HOLLISTER AVENUE
GOLETA, CA 93117 USA
P. 805 682 0842 F. 805 682 9434